ENCLOSURES & ASSEMBLY SERVICES

BOX ENCLOSURES, INC
14092 W. Lambs Lane
Libertyville, Il 60048

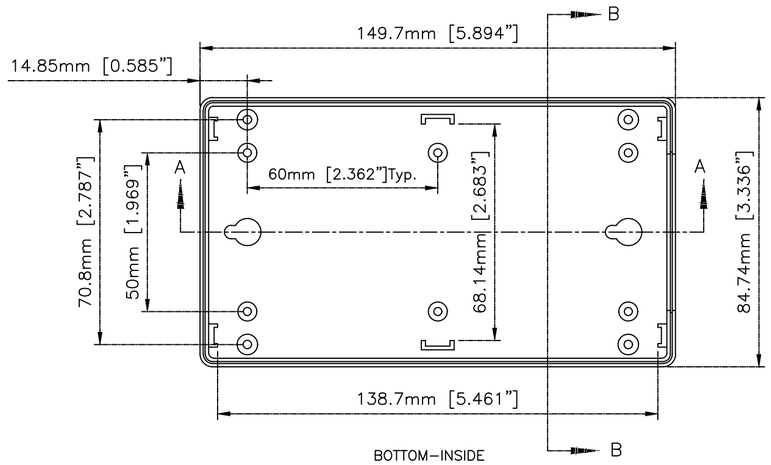

BOTTOM–INSIDE

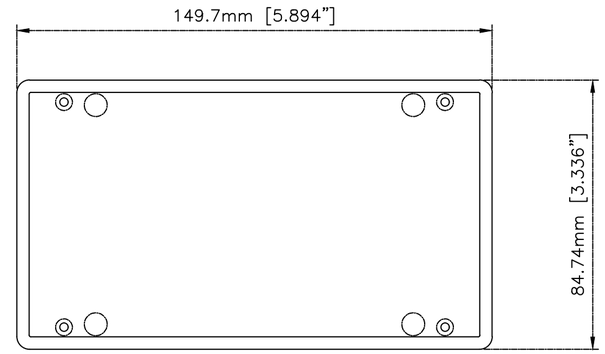

BOTTOM–OUTSIDE

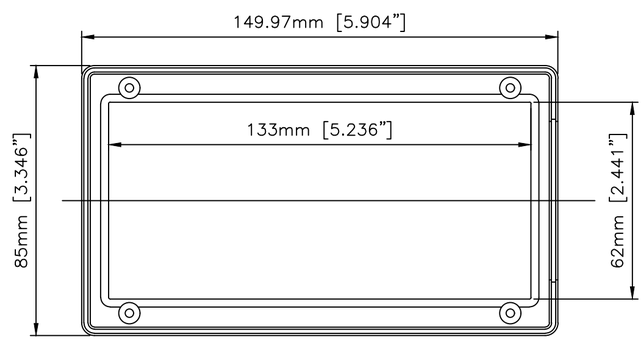

TOP–INSIDE

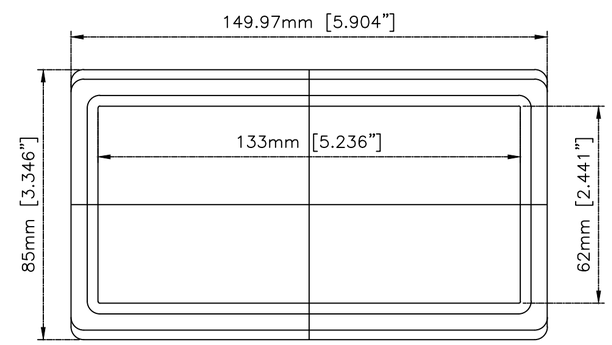

TOP–OUTSIDE

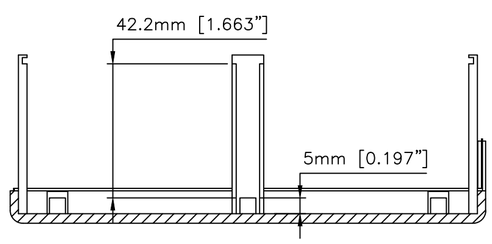

SECTION A–A

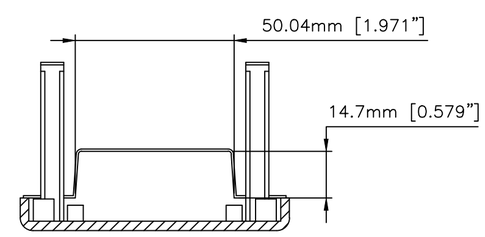

SECTION B–B

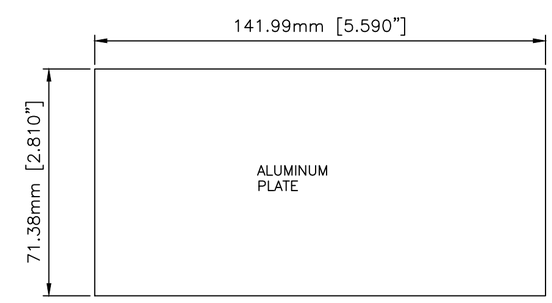

ENCLOSURES & ASSEMBLY SERVICES

Title	Eng. Drawing C size Master		
DATE 4/5/19	BOX # FTM–165		Drn. by R.F.K.
SCALE 1:1	SHEET 1of1		REV 19.A

THIS DRAWING IS THE PROPERTY OF AND MAY EMBODY PROPRIETARY INFORMATION OWNED BY Box Enclosures® IT IS PROVIDED UNDER A CONFIDENTIAL RELATIONSHIP FOR A SPECIFIC PURPOSE. THE RECIPIENT AGREES TO USE IT ONLY FOR SUCH PURPOSE AND RETURN IT TO Box Enclosures® UPON REQUEST.