ENCLOSURES & ASSEMBLY SERVICES
WWW.BOXENCLOSURES.COM

BOX ENCLOSURES-USA
28915 N. Herky Dr #107
LAKE BLUFF, IL 60044
TEL: 847-932-4700
FAX: 847-932-4701
E-Mail - sales@boxenclosures.com

BOX ENCLOSURES-UK
I Ash Grove
Keighley England B0207Q5
TEL: +44 (0) 1535 636 856
FAX: +44 (0) 1535 637 737

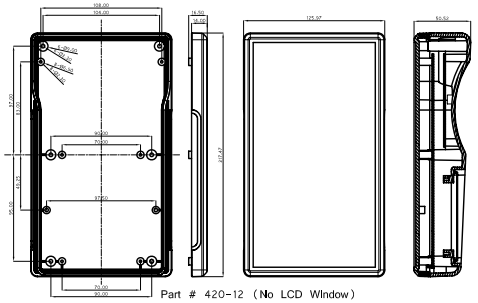

Part # 420-12 (No LCD Window)
TOP-(NO-LCD)

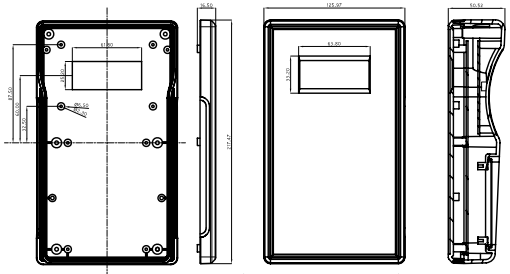

Part # 423-12 (16 character X 4 Line LCD)
TOP-(MDL-S-16465)

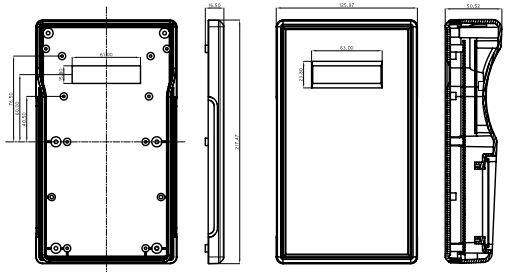

Part # 421-12 (16 Character x 2 Line LCD)
TOP-(MDL-S-16265)

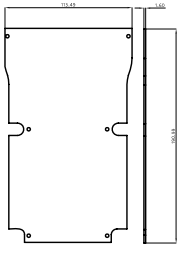

MAIN-PCB

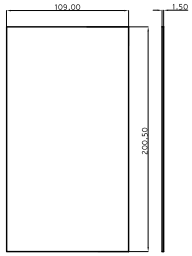

MEMBRANE KEY PAD
Recessed Area Size

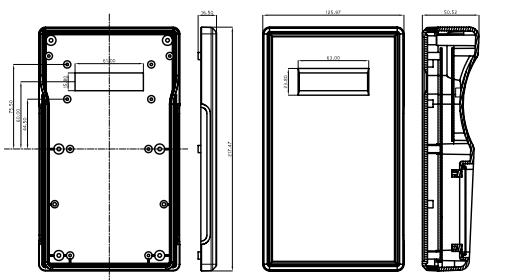

Part # 422-12 (16 Character x 2 Line Compact LCD)
TOP-(MDL-S-16265B)

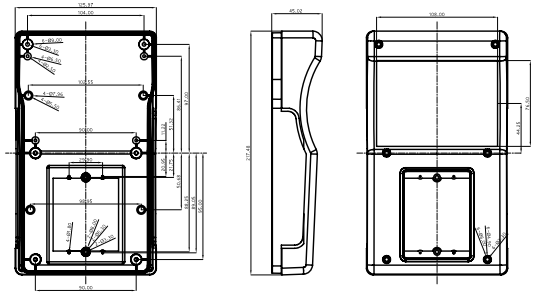

BOTTOM

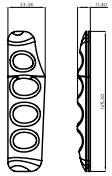

RUBBER- RIGHT

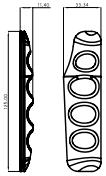

RUBBER- LEFT

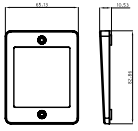

BATTERY-DOOR

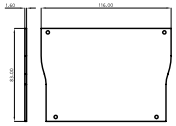

BOTTOM-PCB

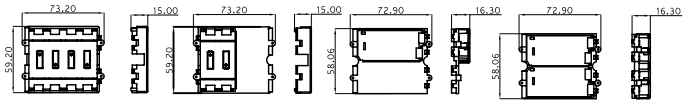

4X2AA Battery Holder
2X2AA Battery Holder
1X9V Battery Holder
2X9V Battery Holder

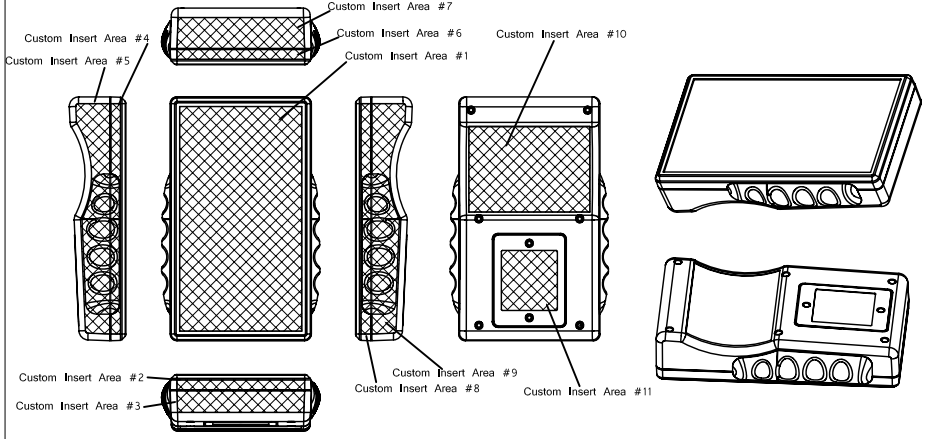

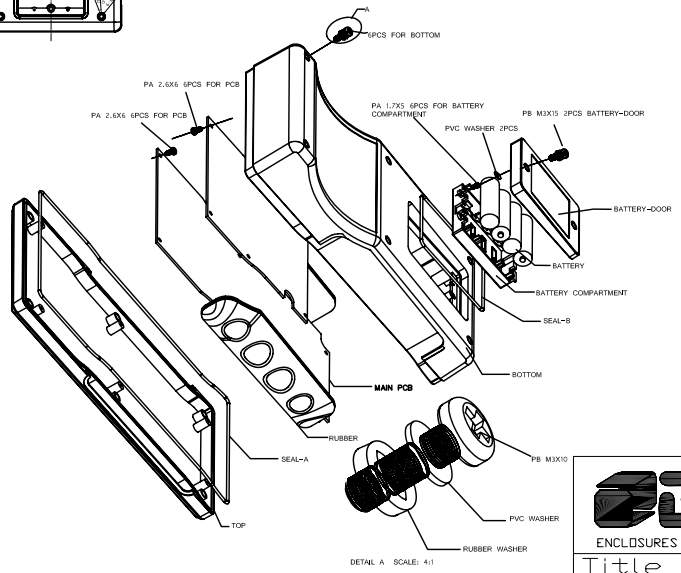

SLOPE-M-Explode

200 thru 500 Series - Battery Holders sold separately		
Part #	Battery Type	Color
SBH-2 9V-BK	For2 9V batteries	Black
SBH-2 9V-TW	For2 9V batteries	White
SBH-2 AA-BK	For2 AA batteries	Black
SBH-2 AA-TW	For2 AA batteries	White
SBH-4 AA-BK	For4 AA batteries	Black
SBH-4 AA-TW	For4 AA batteries	White
SBH-9V-BK	For1 9V battery	Black
SBH-9V-TW	For1 9V battery	White

400 Series - Medium Rubber Side Grips 2 per pack -sold separately	
Part #	Color
42G-BG	Beige
42G-BK	Black
42G-GR	Green
42G-GY	Grey
42G-LB	Light Blue
42G-OR	Orange
42G-OW	Off White
42G-RD	Red
42G-YE	Yellow

Part Number Definitions
400 Series - Medium Enclosures

Part #	Color	LCD Window Size	LCD Type (Characters x Lines)	LCD Part #	LCD Manufacturer
420-12-BK	Black	None	None	None	None
421-12-BK	Black	2.4X0.6	16X2	MDL(S)-16265	Varitronix
422-12-BK	Black	2.4X0.6	16X2 compact	MDL(S)-16265B	Varitronix
423-12-BK	Black	2.4X1.0	16X4	MDL(S)-16465	Varitronix
420-12-TW	White	None	None	None	None
421-12-TW	White	2.4X0.6	16X2	MDL(S)-16265	Varitronix
422-12-TW	White	2.4X0.6	16X2 compact	MDL(S)-16265B	Varitronix
423-12-TW	White	2.4X1.0	16X4	MDL(S)-16465	Varitronix

ENCLOSURES & ASSEMBLY SERVICES

Title
400 Series-Medium Grip Tech Master Drawing

Revision:2

Material:
Polycarbonate

Sealing Rating
NEMA 4/IP65

Burn Rating:
UL 94 V2

TOLERANCE
all dimension in mm
unless otherwise specified.
x ±0.20
.x ±0.10
.xx ±0.05
ANGLE ±0.5°

Drn. Pan
Date. 2008-09-29

RoHs Compliant

Proj.

THIS DRAWING IS THE PROPERTY OF AND MAY EMBODY PROPRIETARY INFORMATION OWNED BY Box Enclosures . IT IS PROVIDED UNDER A CONFIDENTIAL RELATIONSHIP FOR A SPECIFIC PURPOSE. THE RECIPIENT AGREES TO USE IT ONLY FOR SUCH PURPOSE AND RETURN IT TO Box Enclosure UPON REQUEST.