ENCLOSURES & ASSEMBLY SERVICES

BOX ENCLOSURES, INC
28915 N. Herky Drive Unit, 107,
LAKE BLUFF, IL 60044
TEL: 847-932-4700 WWW.BOXENCLOSURES.COM FAX: 847-932-4701

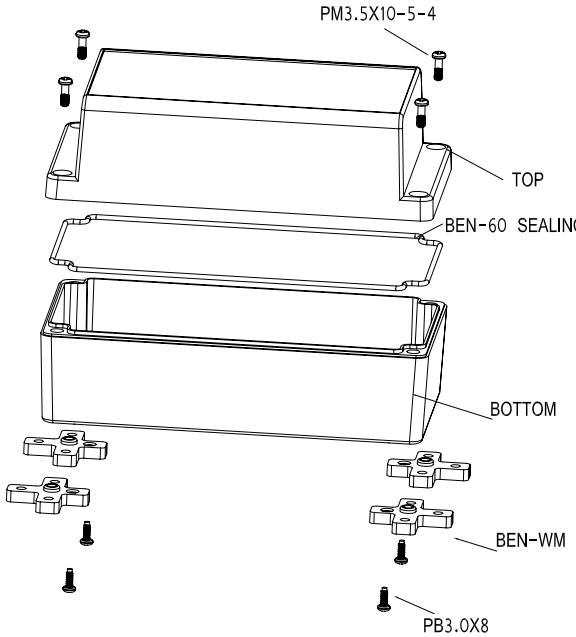

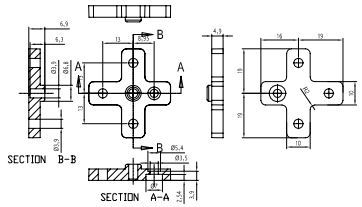

Wall Mount
Part #BEN-WM

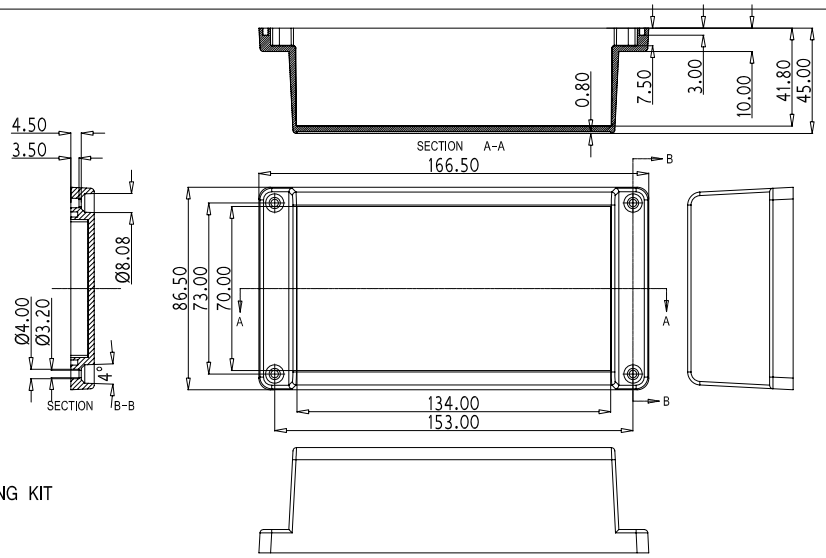

BEN-60-TOP

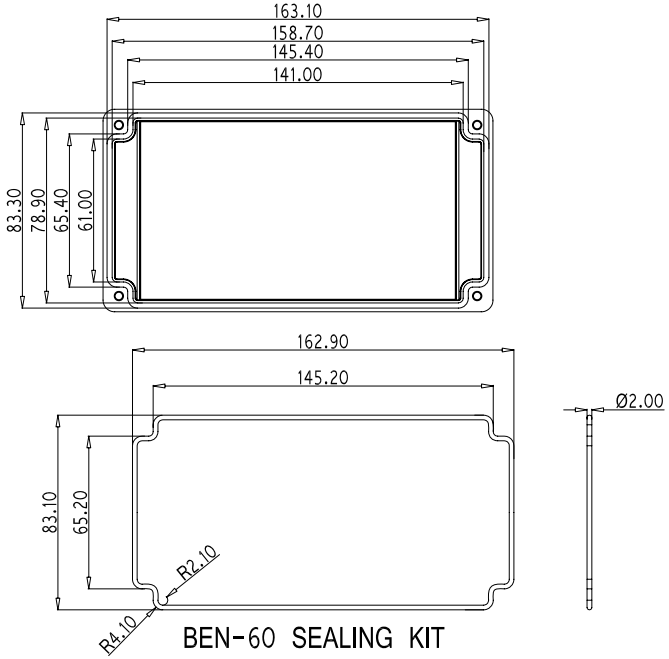

BEN-60 SEALING KIT

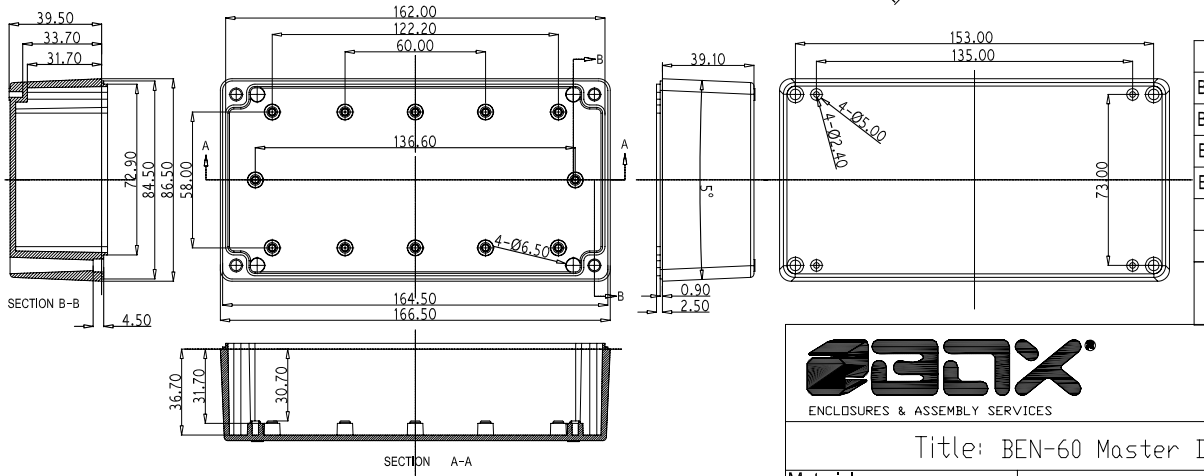

BEN-60-BOTTOM

Part Number	Top Color	Bottom Color
BEN-60P	Grey	Grey
BEN-60PC	Clear	Grey
BEN-60P-BLK	Black	Black
BEN-60PC-BLK	Clear	Black
Optional Accessory		
Wall mount kit, pack of 4, color grey. Part # BEN-WM		

Material - Polycarbonate, fire retardant UL 94-V2
Sealing Kit - NEMA 4 / IP65, material - Silicone

ENCLOSURES & ASSEMBLY SERVICES

Title: BEN-60 Master Drawing

Revision: 1.10

Material: Polycarbonate

Finish: Polished

Pro.

TOLERANCE
all dimension in mm
unless otherwise specified.
x ±0.20
.x ±0.10
.xx ±0.05
ANGLE ±0.5°

Drn. PAN Date 2008-08-22

Fire rating: UL 94-V2

Sealing rating: NEMA4 / IP65

THIS DRAWING IS THE PROPERTY OF AND MAY EMBODY PROPRIETARY INFORMATION OWNED BY Box Enclosures . IT IS PROVIDED UNDER A CONFIDENTIAL RELATIONSHIP FOR A SPECIFIC PURPOSE. THE RECIPIENT AGREES TO USE IT ONLY FOR SUCH PURPOSE AND RETURN IT TO Box Enclosure UPON REQUEST.